Work Order ID 66037

Wednesday, February 02, 2011 2:50:15 PM

Item ID: D3471-041 **Accept** **Setup Start**

Revision ID: **Stop**

Item Name: Blower Motor Support

Start Date: 2/2/2011 **Start Qty:** 3.00 **Cust Item ID:**

Required Date: 2/4/2011 **Req'd Qty:** 3.00 **Customer:**

Reference:

Approvals: **Process Plan:** H **Date:** 11-02-2 **Tooling:** _____ **Date:** _____ **Run Start**

QC: _____ **Date:** _____ **SPC (Y/N):** _____ **Date:** _____ **Stop**

Sequence ID/ Work Center ID	Operation Description	Set Up/ Run Hours	Tool ID	Tool #	Plan Code	Accept Qty	Reject Qty	Reject Number	Insp. Stamp
Draw Nbr	**Revision Nbr**								
D3471	Rev A								
100	Small Fab	0.00							
Small Fab	**Memo**	0.00							
Small Fab	Assemble as per dwg D3471								
110	QC5- Inspect part completeness to step on W/O	0.00							
QC	**Memo**	0.00							
Quality Control									
120	Identify as per dwg & Stock Location: 159	0.00							
Packaging	**Memo**	0.00							
Packaging									

11/02/17 (3)

11/02/17 (x3)

11/2/17 SP (3x)

Dart Aerospace Ltd

W/O:		WORK ORDER CHANGES					
DATE	STEP	PROCEDURE CHANGE	By	Date	Qty	Approval Chief Eng / Prod Mgr	Approval QC Inspector

Part No: _____ **PAR #:** _____ **Fault Category:** _____ **NCR:** Yes No **DQA:** _____ **Date:** _____

Resolution: _____ **Disposition:** _____ **QA: N/C Closed:** _____ **Date:** _____

NCR:		WORK ORDER NON-CONFORMANCE (NCR)						
DATE	STEP	Description of NC Section A	Corrective Action Section B			Verification Section C	Approval Chief Eng	Approval QC Inspector
			Initial Chief Eng	Action Description Chief Eng	Sign & Date			

NOTE: Date & initial all entries

H:\fFORMS\Quality Assurance\approved QA\NCRWO RevE

Work Order ID 66037

Wednesday, February 02, 2011 2:50:15 PM

Item ID: D3471-041
Revision ID:
Item Name: Blower Motor Support

Accept

Setup Start
Stop

Start Date: 2/2/2011 **Start Qty:** 3.00
Required Date: 2/4/2011 **Req'd Qty:** 3.00
Reference:

Cust Item ID:
Customer:

Approvals: **Process Plan:** _____ **Date:** _____ **Tooling:** _____ **Date:** _____
QC: _____ **Date:** _____ **SPC (Y/N):** _____ **Date:** _____

Run Start
Stop

Sequence ID/ Work Center ID	Operation Description	Set Up/ Run Hours	Tool ID	Tool #	Plan Code	Accept Qty	Reject Qty	Reject Number	Insp. Stamp
130	QC21- Final Inspection - Work Order Release	0.00							
QC Quality Control	**Memo**	0.00							

11/02/17

11-02-17

Dart Aerospace Ltd

W/O:		WORK ORDER CHANGES					
DATE	STEP	PROCEDURE CHANGE	By	Date	Qty	Approval Chief Eng / Prod Mgr	Approval QC Inspector

Part No: _____ **PAR #:** _____ **Fault Category:** _____ **NCR:** Yes No **DQA:** _____ **Date:** _____

Resolution: _____ **Disposition:** _____ **QA: N/C Closed:** _____ **Date:** _____

NCR:		WORK ORDER NON-CONFORMANCE (NCR)						
DATE	STEP	Description of NC Section A	Corrective Action Section B			Verification Section C	Approval Chief Eng	Approval QC Inspector
			Initial Chief Eng	Action Description Chief Eng	Sign & Date			

NOTE: Date & initial all entries

H:\fFORMS\Quality Assurance\approved QA\NCRWO RevE

Picklist Print

Wednesday, February 02, 2011 2:50:21 PM

Work Order ID: 66037

Parent Item: D3471-041

Parent Item Name: Blower Motor Support

Start Date: 2/2/2011 **Required Date:** 2/4/2011

Start Qty: 3.00 **Required Qty:** 3.00

Comments: IPP rev A 06.03.02 New issue EC

Component Item ID/ Item Name	Replacement Item ID	Mfg/ Purch	Bin Item	Primary Location	Last Location	Route Seq ID	Unit of Measure	Qty on Hand	Qty per Kit	Total Qty	Qty Issued	Date Issued	Status
D3471-043		Manufactured	No			100	Each	0.0000	2	6			
Support & Clamp Assembly						B66186 6X					11/02/17		
D3471-1		Manufactured	No			100	Each	6.0000	1	3			
Base											11/02/17		
				Location			**Loc Qty**		**Loc Code**				
				ST159			6						
					34413		2			2			
					48362		4			1			
MS20470AD4-5		Purchased	No			100	Each	1,164.000	8	24			
Rivet, Universal Head											11/02/17		
				Location			**Loc Qty**		**Loc Code**				
				ST319			1164						
					116410		1164			24			

Dart Aerospace Ltd

W/O:		WORK ORDER CHANGES					
DATE	STEP	PROCEDURE CHANGE	By	Date	Qty	Approval Chief Eng / Prod Mgr	Approval QC Inspector

Part No: _____ **PAR #:** _____ **Fault Category:** _____ **NCR:** Yes No **DQA:** _____ **Date:** _____

Resolution: _____ **Disposition:** _____ **QA: N/C Closed:** _____ **Date:** _____

NCR:		WORK ORDER NON-CONFORMANCE (NCR)						
DATE	STEP	Description of NC Section A	Corrective Action Section B			Verification Section C	Approval Chief Eng	Approval QC Inspector
			Initial Chief Eng	Action Description Chief Eng	Sign & Date			

NOTE: Date & initial all entries

DESIGN	DRAWN BY	DART AEROSPACE LTD HAWKESBURY, ONTARIO, CANADA	
CHECKED	APPROVED	DRAWING NO. D3471	REV. A SHEET 1 OF 5
DATE 05.12.21		TITLE BLOWER MOTOR SUPPORT	SCALE 1:6
A	05.12.21	NEW ISSUE	

06.04.03

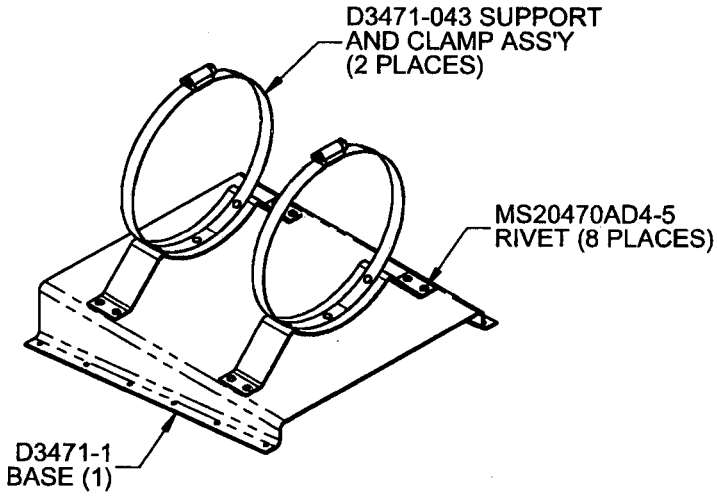

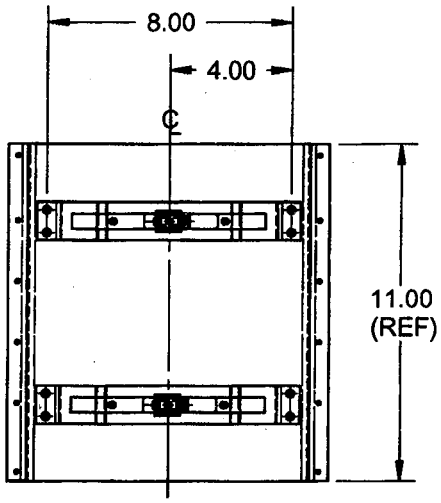

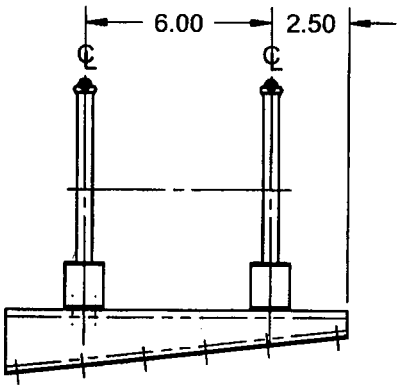

SHOP COPY
RETURN TO
ENGINEERING
UNCONTROLLED COPY
SUBJECT TO AMENDMENT
WITHOUT NOTICE
WORK ORDER
NO. 46037
PR 11-02-2

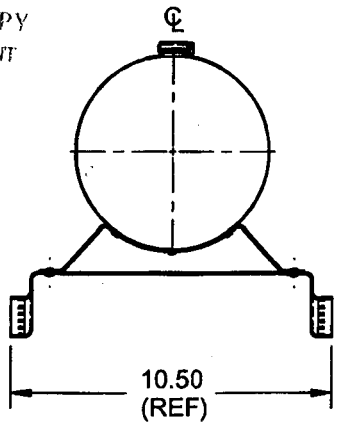

D3471-041 BLOWER MOTOR SUPPORT

NOTES:

1) IDENTIFY WITH DART P/N D3471-041 USING FINE POINT PERMANENT INK MARKER
2) TOLERANCES ARE PER DART QSI 018 UNLESS OTHERWISE NOTED
3) ALL DIMENSIONS ARE IN INCHES
4) BREAK ALL SHARP EDGES 0.005 TO 0.010

QTY -041	P/N	DESCRIPTION
X	D3471-041	BLOWER MOTOR SUPPORT
2	D3471-043	SUPPORT AND CLAMP ASSEMBLY
1	D3471-1	BASE
8	MS20470AD4-5	RIVET

Dart Aerospace Ltd

W/O:		WORK ORDER CHANGES					
DATE	STEP	PROCEDURE CHANGE	By	Date	Qty	Approval Chief Eng / Prod Mgr	Approval QC Inspector

Part No: _____ **PAR #:** _____ **Fault Category:** _____ **NCR:** Yes No **DQA:** _____ **Date:** _____

Resolution: _____ **Disposition:** _____ **QA: N/C Closed:** _____ **Date:** _____

NCR:		WORK ORDER NON-CONFORMANCE (NCR)						
DATE	STEP	Description of NC Section A	Corrective Action Section B			Verification Section C	Approval Chief Eng	Approval QC Inspector
			Initial Chief Eng	Action Description Chief Eng	Sign & Date			

NOTE: Date & initial all entries

DESIGN	DRAWN BY	DART AEROSPACE LTD HAWKESBURY, ONTARIO, CANADA	
CHECKED	APPROVED	DRAWING NO. D3471	REV. A SHEET 2 OF 5
DATE 05.12.21		TITLE BLOWER MOTOR SUPPORT	SCALE 1:3

06.04.03

LOCATE AND TRANSFER DRILL #30 (Ø0.129) THRU HOLE FROM D3471-3 TO MS35842-16 CLAMP AND C'SINK Ø0.230 X 100° (3 PLACES)

DETAIL A: COUNTERSINK HOLES
(RIVET NOT SHOWN FOR CLARITY)
SCALE 1:1

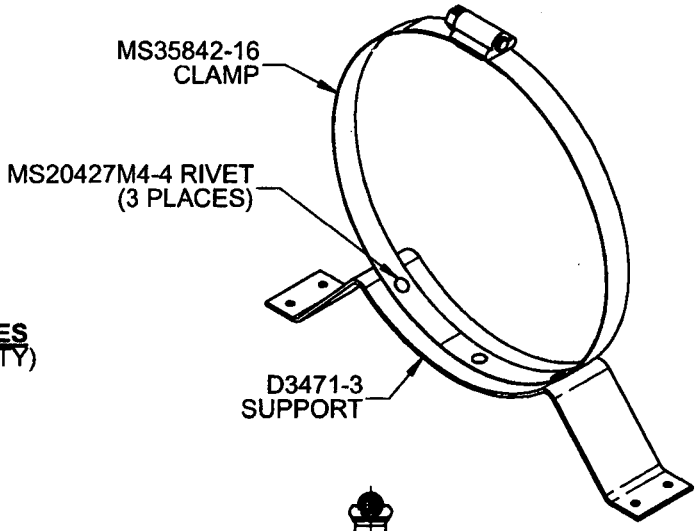

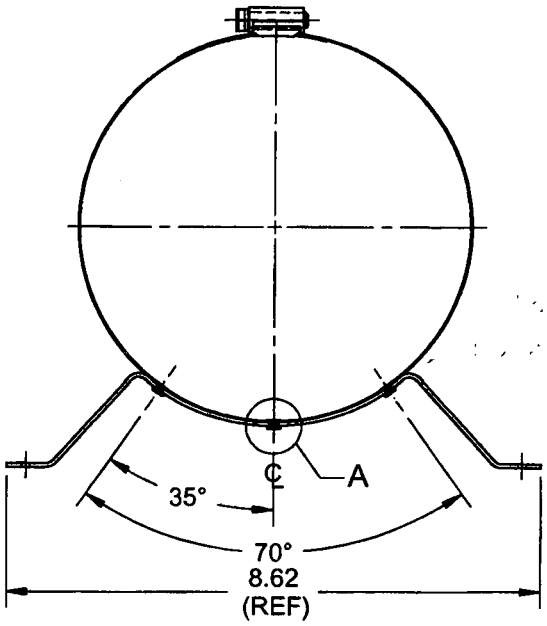

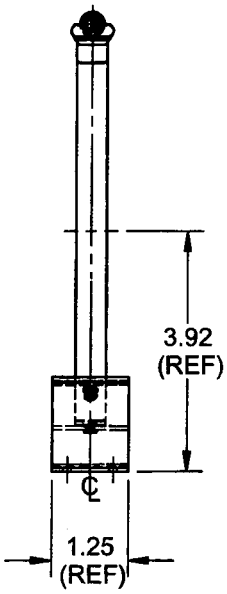

w/066037

D3471-043 SUPPORT & CLAMP ASS'Y

QTY -043	P/N	DESCRIPTION
X	D3471-043	SUPPORT AND CLAMP ASSEMBLY
1	D3471-3	SUPPORT
3	MS20427M-4	RIVET
1	MS35842-16	CLAMP

NOTES:

1) TOLERANCES ARE PER DART QSI 018 UNLESS OTHERWISE NOTED
2) ALL DIMENSIONS ARE IN INCHES
3) BREAK ALL SHARP EDGES 0.005 TO 0.010

Dart Aerospace Ltd

W/O:		WORK ORDER CHANGES					
DATE	STEP	PROCEDURE CHANGE	By	Date	Qty	Approval Chief Eng / Prod Mgr	Approval QC Inspector

Part No: _____ **PAR #:** _____ **Fault Category:** _____ **NCR:** Yes No **DQA:** _____ **Date:** _____

Resolution: _____ **Disposition:** _____ **QA: N/C Closed:** _____ **Date:** _____

NCR:		WORK ORDER NON-CONFORMANCE (NCR)						
DATE	STEP	Description of NC Section A	Corrective Action Section B			Verification Section C	Approval Chief Eng	Approval QC Inspector
			Initial Chief Eng	Action Description Chief Eng	Sign & Date			

NOTE: Date & initial all entries

'H:\fFORMS\Quality Assurance\approved QA\NCRWO RevE

DESIGN	DRAWN BY	DART AEROSPACE LTD HAWKESBURY, ONTARIO, CANADA	
CHECKED	APPROVED	DRAWING NO. D3471	REV. A SHEET 3 OF 5
DATE 05.12.21		TITLE BLOWER MOTOR SUPPORT	SCALE 1:4

DART

06.04.03

w/o 66037

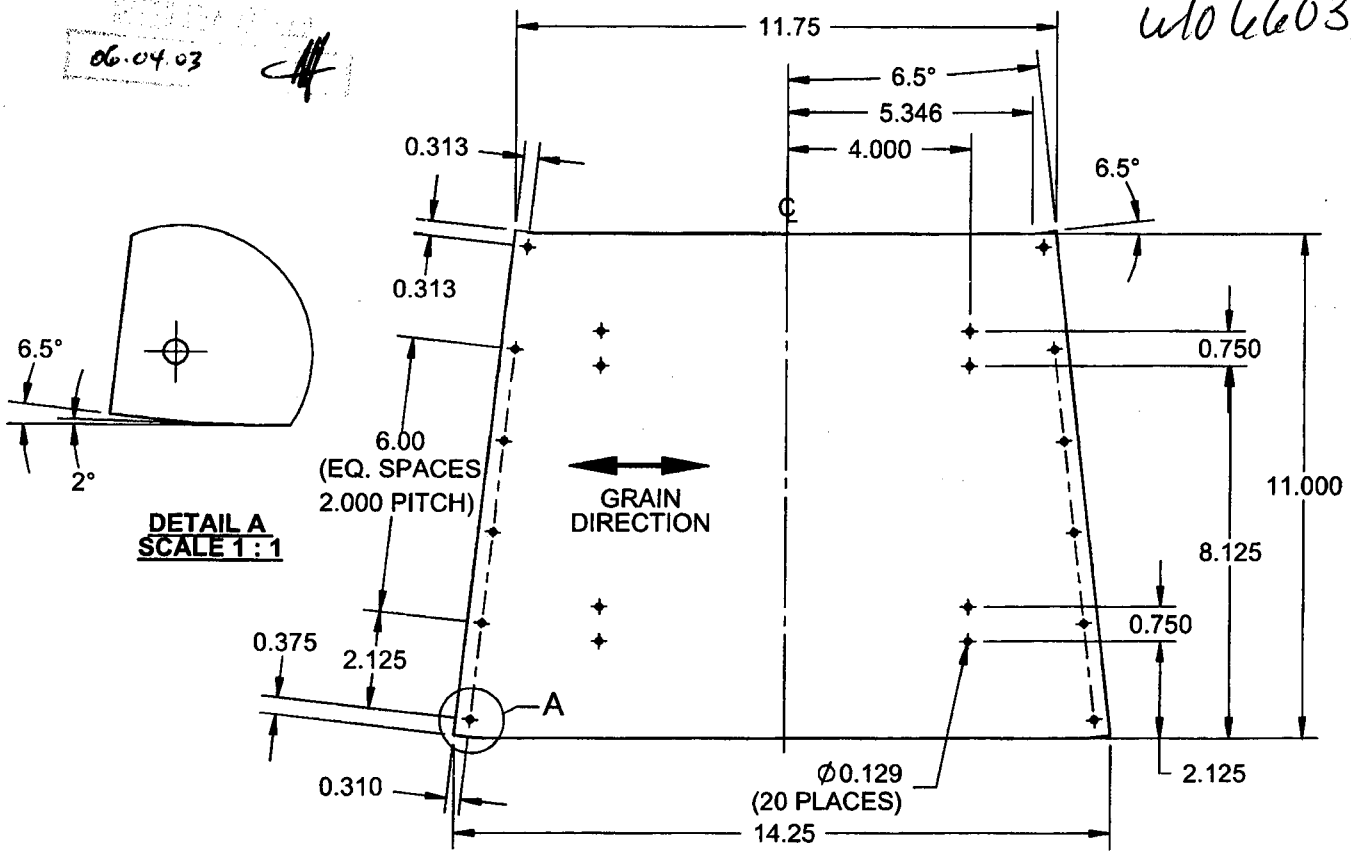

D3471-1F BASE FLAT PATTERN

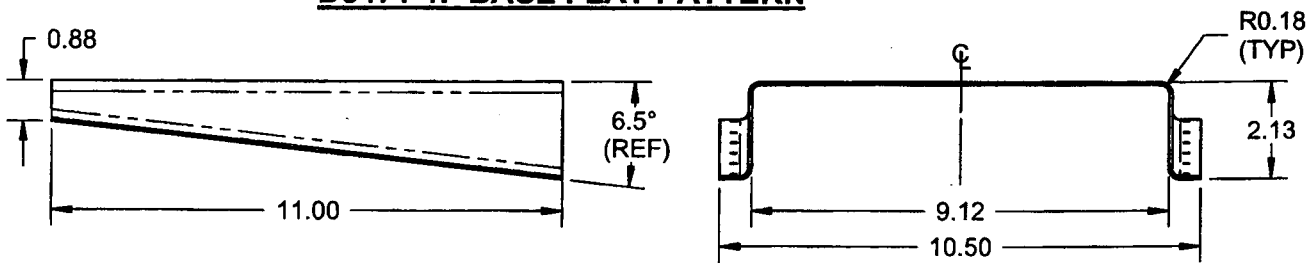

D3471-1 BASE BENDING DETAIL

NOTES:

1) MATERIAL: 2024-T3 ALUMINUM SHEET (0.063" THICK)
PER QQ-A-250/4 OR AMS 4037
(REF. DART SPEC. M2024T3S.063)
2) FINISH: CHEMICAL CONVERSION COAT PER DART QSI 005 4.1
3) PART IS SYMMETRICAL ABOUT CENTER LINE
4) ALL DIMENSIONS ARE IN INCHES
5) BREAK ALL SHARP EDGES 0.005 TO 0.010

Dart Aerospace Ltd

W/O:		WORK ORDER CHANGES					
DATE	STEP	PROCEDURE CHANGE	By	Date	Qty	Approval Chief Eng / Prod Mgr	Approval QC Inspector

Part No: _____ **PAR #:** _____ **Fault Category:** _____ **NCR:** Yes No **DQA:** _____ **Date:** _____

Resolution: _____ **Disposition:** _____ **QA: N/C Closed:** _____ **Date:** _____

NCR:		WORK ORDER NON-CONFORMANCE (NCR)						
DATE	STEP	Description of NC Section A	Corrective Action Section B			Verification Section C	Approval Chief Eng	Approval QC Inspector
			Initial Chief Eng	Action Description Chief Eng	Sign & Date			

NOTE: Date & initial all entries

*H:\fFORMS\Quality Assurance\approved QA\NCRWO RevE

DESIGN	DRAWN BY	DART AEROSPACE LTD HAWKESBURY, ONTARIO, CANADA	
CHECKED	APPROVED	DRAWING NO. D3471	REV. A SHEET 4 OF 5
DATE 05.12.21		TITLE BLOWER MOTOR SUPPORT	SCALE 1:2

06.04.03

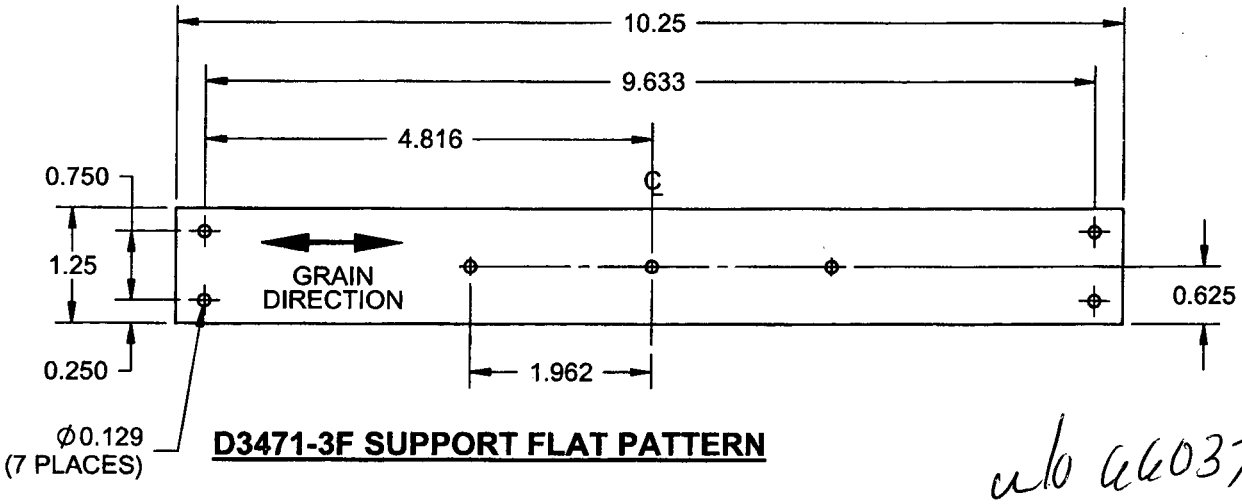

D3471-3F SUPPORT FLAT PATTERN

w/o 46037

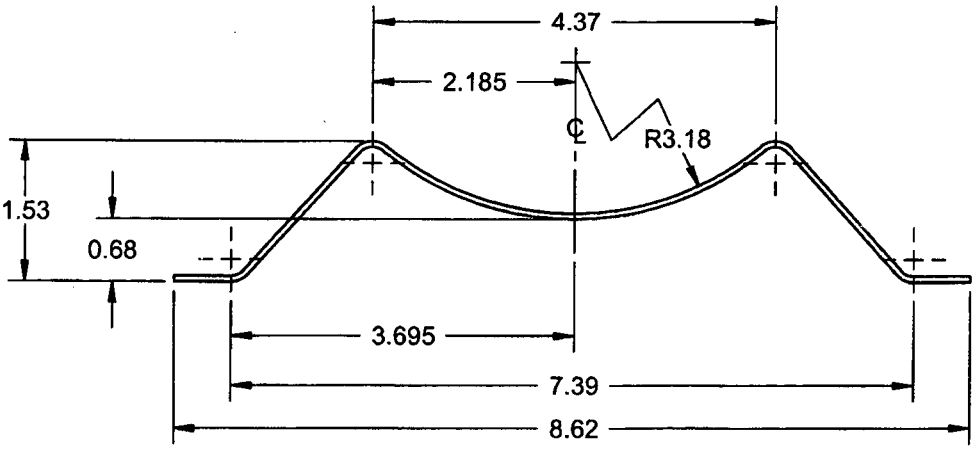

D3471-3 SUPPORT BENDING DETAIL

NOTES:

1) MATERIAL: 2024-T3 ALUMINUM SHEET (0.063 THICK)
PER AMS-QQ-A-250/4 OR AMS 4037
(REF. DART SPEC. M2024T3S.063)
2) FINISH: CHEMICAL CONVERSION COAT PER DART QSI 005 4.1
2) PART IS SYMETRICAL ABOUT CENTER LINE
3) ALL DIMENSIONS ARE IN INCHES
4) BREAK ALL SHARP EDGES 0.005 TO 0.010

Dart Aerospace Ltd

W/O:		WORK ORDER CHANGES					
DATE	STEP	PROCEDURE CHANGE	By	Date	Qty	Approval Chief Eng / Prod Mgr	Approval QC Inspector

Part No: _____ **PAR #:** _____ **Fault Category:** _____ **NCR:** Yes No **DQA:** _____ **Date:** _____

Resolution: _____ **Disposition:** _____ **QA: N/C Closed:** _____ **Date:** _____

NCR:		WORK ORDER NON-CONFORMANCE (NCR)						
DATE	STEP	Description of NC Section A	Corrective Action Section B			Verification Section C	Approval Chief Eng	Approval QC Inspector
			Initial Chief Eng	Action Description Chief Eng	Sign & Date			

NOTE: Date & initial all entries

H:\fFORMS\Quality Assurance\approved QA\NCRWO RevE

DESIGN	DRAWN BY	DART AEROSPACE LTD HAWKESBURY, ONTARIO, CANADA	
CHECKED	APPROVED	DRAWING NO. D3471	REV. A SHEET 5 OF 5
DATE 05.12.21		TITLE BLOWER MOTOR SUPPORT	SCALE 1:1

06.04.03

w/o 66037

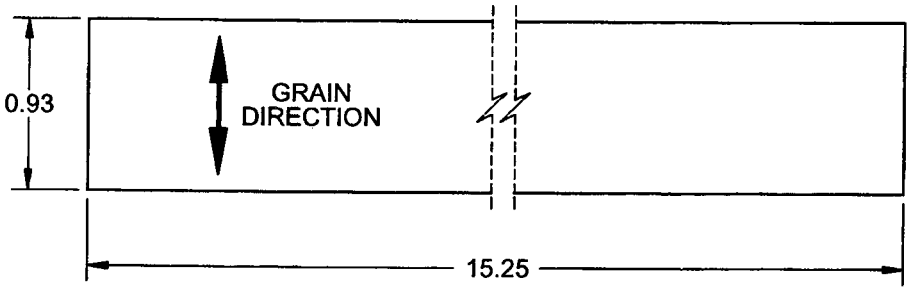

D3471-5F STIFFENER FLAT PATTERN

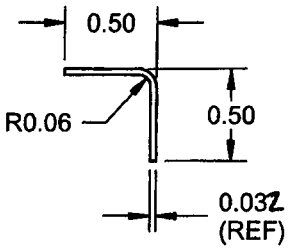

D3471-5 STIFFENER BENDING DETAIL

D3471-5 STIFFENER

NOTES:

1) MATERIAL: 2024-T3 ALUMINUM SHEET (0.032" THICK)
PER QQ-A-250/4 OR AMS 4037
(REF. DART SPEC. M2024T3S.032)
2) FINISH: CHEMICAL CONVERSION COAT PER DART QSI 005 4.1
3) TOLERANCES ARE PER DART QSI 018 UNLESS OTHERWISE NOTED
4) ALL DIMENSIONS ARE IN INCHES
5) BREAK ALL SHARP EDGES 0.005 TO 0.010

Dart Aerospace Ltd

W/O:		WORK ORDER CHANGES					
DATE	STEP	PROCEDURE CHANGE	By	Date	Qty	Approval Chief Eng / Prod Mgr	Approval QC Inspector

Part No: _____ **PAR #:** _____ **Fault Category:** _____ **NCR:** Yes No **DQA:** _____ **Date:** _____

Resolution: _____ **Disposition:** _____ **QA: N/C Closed:** _____ **Date:** _____

NCR:		WORK ORDER NON-CONFORMANCE (NCR)						
DATE	STEP	Description of NC Section A	Corrective Action Section B			Verification Section C	Approval Chief Eng	Approval QC Inspector
			Initial Chief Eng	Action Description Chief Eng	Sign & Date			

NOTE: Date & initial all entries

*H:\FORMS\Quality Assurance\approved QA\NCRWO RevE